COMMERCIAL Tx For TOP BAND

THE NEW "K.W. ONE-SIXTY"

A recent product in the K.W. Electronics, Ltd., range of amateur-band equipment is the "K.W. One-Sixty"—a self-contained CW/Phone transmitter for Top Band, needing only an AC mains lead, aerial, microphone and/or key to put a 10-watt signal on the air.

It is a neat and compact piece of equipment, as can be seen from the photograph below and the illustration on the next page. Dimensions are 12 ins. wide by 6 ins. high and 10 ins. from back to front. The "K.W. One-Sixty" modulates fully at the 10w. input, the quality being rated on the air as "excellent." The CW output is T9x, with complete cut-off when the key is up.

The VFO scale, about 6 ins. long, is clearly and accurately calibrated; the netting switch brings in VFO alone, which can be set spot-on the required frequency. Using the normal *pi*-tank output arrangement, the PA can be matched into a wide range of end-on aerials—though it is, of course, better to go into the aerial through an ATU.

All external connections—mains lead, aerial, key, microphone and muting socket (operated by the send-receive switch on the front panel)—are carried on the rear chassis drop. This makes for clean and tidy installation. Controls are well set out, operation is simple, and altogether the "K.W. One-Sixty," in its smartly-styled cabinet, is a very nice piece of gear to have available for 160-metre working. The circuit of the transmitter, with all values, is given overleaf. Features to notice are that the VFO is on a stabilised line, two 6X4's are used for power supply, and the function switch cuts HT to speech amplifier stages and modulator screens when on CW. [*see circuit p.482*

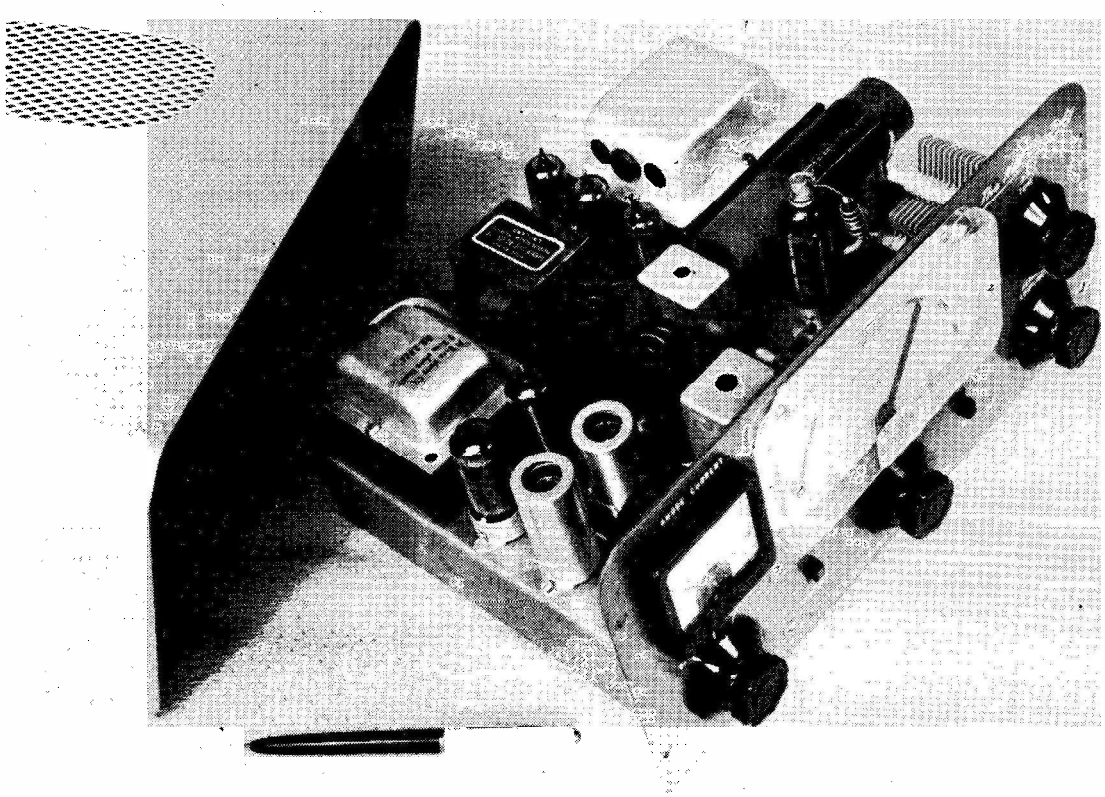

Interior view of the new "K.W. One-Sixty" Transmitter, which is a neat and compact job, right up to the K.W. Electronics' high standard for design, finish and performance. The speech amplifier gives ample gain with any standard crystal microphone, the CW output is particularly clean, and the VFO sets accurately while being immune from PA pulling. The meter reads PA plate current, the knob beneath giving "off," and phone/CW selection. The VFO dial is 5 ins. wide, the control being the central knob along the lower panel edge. At right are the PA tune and aerial coupling controls (C18 and C19 in the circuit diagram). A slide-switch (left, S3 in the circuit) gives send-receive control, the right-hand slide-switch below the VFO dial being S2, the VFO net control.

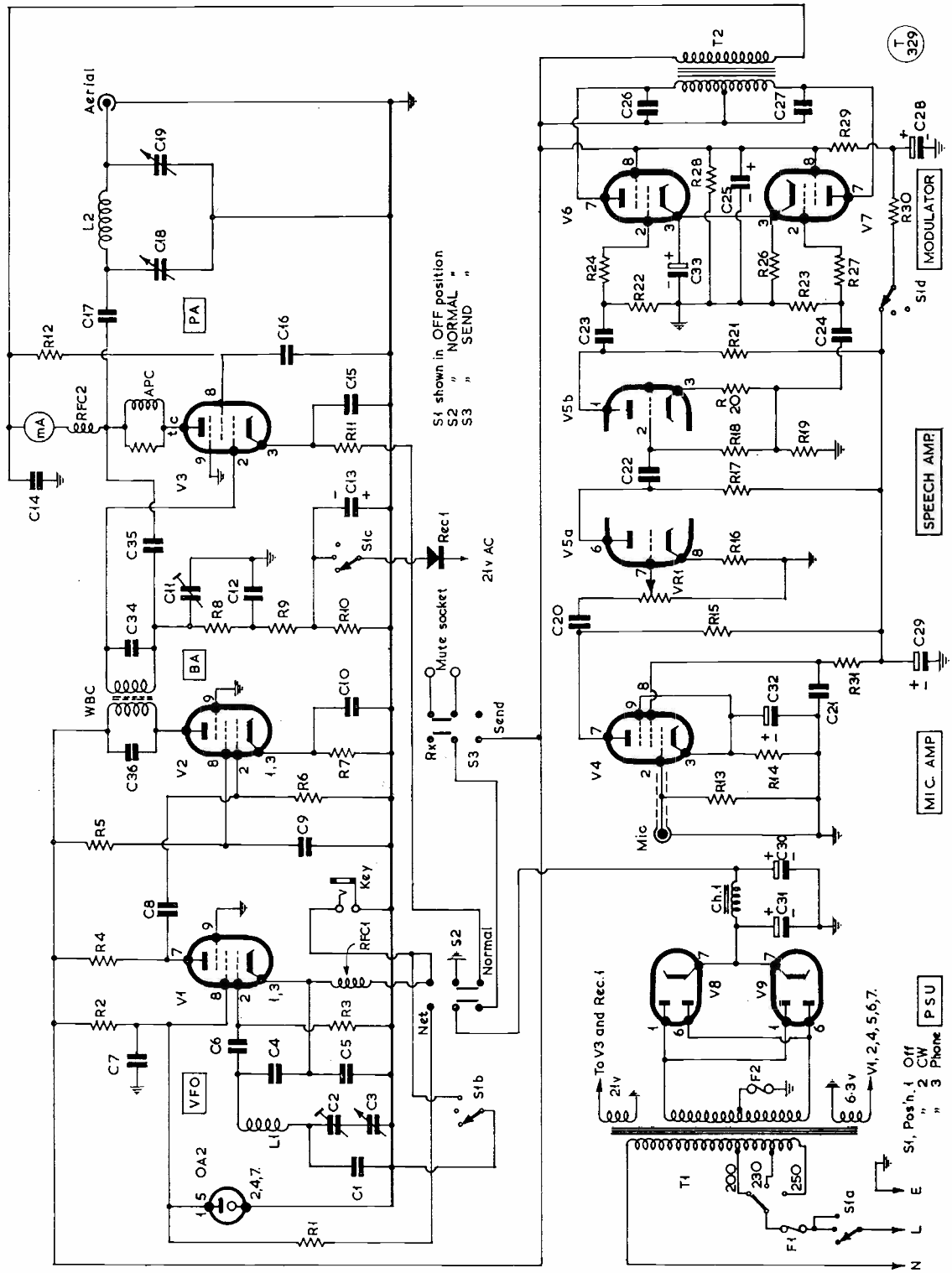
Aerial
L2
C19
C18
C17
R12
C14
mA
RFC2
APC
V3
C16
C15
R11
C13
S1c
Rec.1
21v AC
S1 shown in OFF position
S2 " NORMAL "
S3 " SEND
C35
C34
C11
C12
R8
R9
R10
WBC
C36
V2
C10
R7
R6
R5
C9
C8
R4
R2
C7
V1
VFO
C6
C4
C5
R3
C2
C3
L1
C1
OA2
R1
Key
RFC1
Net
S2
Normal
S3
Send
Rx
Mute socket
S1b
T2
C26
C27
R29
C28
V6
V7
R28
C25
R30
MODULATOR
S1d
R24
R22
C33
R26
R23
R27
C23
R21
C24
V5b
R20
R18
R19
SPEECH AMP.
C22
R17
V5a
R16
VR1
C20
R15
C29
R31
C32
C21
V4
R13
R14
Mic
MIC. AMP
C30
C31
Ch.1
V8
V9
To V3 and Rec.1
21v
F2
6·3v
V1, 2, 4, 5, 6, 7.
PSU
T1
200
230
250
F1
S1a
S1, Pos'n. 1 Off
" 2 CW
" 3 Phone
E
L
N
T 329

Table of Values

The "K.W. One-Sixty" Top Band Transmitter

C1	= 50 μμF	R2	= 10,000 ohms, 2w.	R15, R17, R18	= 470,000 ohms	APC	= Anti-parasitic choke
C2	= 30 μμF, trimmer	R3, R5, R24, R27, R28	= 47,000 ohms	R16	= 4,700 ohms	WBC	= Wide-band coupler
C3	= 300 μμF, var.	R6, R19, R21	= 100,000 ohms	R20	= 2,200 ohms	F1	= 1 amp.
C4, C5	= .001 μF, silver mica	R4	= 10,000 ohms	R22, R23	= 220,000 ohms	F2	= 500 mA
C6	= 220 μμF	R7, R11	= 470 ohms	R26	= 250 ohms	V1, V2	= 6BX6
C7, C9, C10, C12, C15, C26, C27	= .005 μF	R8	= 6,800 ohms	R29	= 4,700 ohms, w/wound	V3	= 21A6 (PL81)
C8, C23, C24	= .01 μF	R9, R10, R14	= 1,000 ohms	R31	= 2.2 megohms	V4	= 6BR7
C11	= 750 μμF, trimmer	R12, R30	= 22,000 ohms	VR1	= 0.5 megohm, pre-set gain control	V5	= 12AX7
C13, C32, C33	= 25 μF elect.	R13	= 1 megohm	S1	= 4-pole, 3-way	V6, V7	= 6BW6
C14, C16, C17	= .0018 μF			S2, S3	= 2-pole, 2-way	V8, V9	= 6X4
C18, C19	= 500 μμF, var.					V10	= OA2
C20, C22	= 390 μμF						
C21	= 0.1 μF						
C25, C28, C29	= 8 μF elect.						
C30, C31	= 32 μF, elect.						
C34, C36	= 40 μμF						
C35	= 30 μμF						
R1	= 6,800 ohms, 5w., w/wound						

(NOTE: *Items Rec. 1, Ch.1, T1 and T2, WBC and L1, L2 are as fitted.*)

Fig. 1. Circuit complete of the new "K.W. One-Sixty," a self-contained CW/Phone transmitter for Top Band. It includes all the refinements to give smooth, clean speech with T9x CW note, with BK and receiver muting facilities.

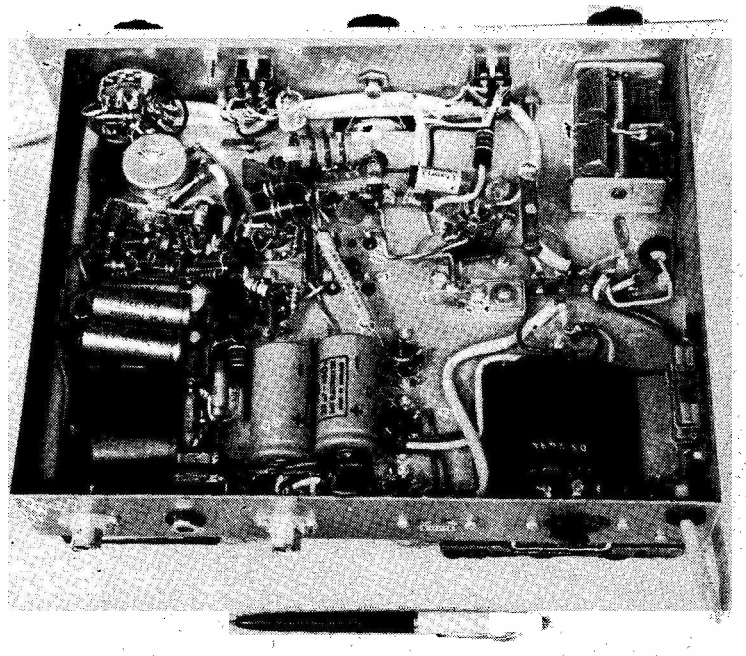

Underneath the "K.W. One-Sixty" transmitter. The output coupling condenser (C19 in the circuit) is top right, and the pre-set audio gain control potentiometer is at upper left, mounted through the chassis, near the function switch. Along the rear chassis drop are the microphone and key inlets, the aerial socket and Rx-mute connector point.

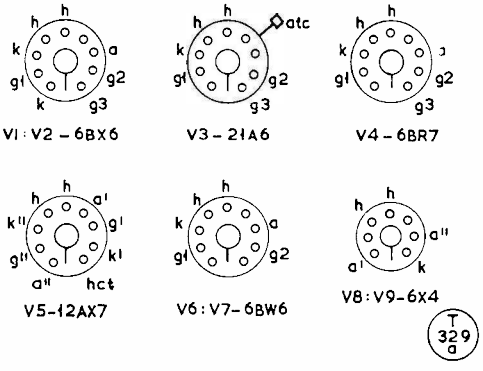

Fig. 2. Base connections of the valves used in the "K.W. One-Sixty" transmitter. Note that for V3, the PL81 in the PA is the equivalent of the 21A6 shown here.

CLEANING UP FORTY

From comments and discussion in overseas Amateur Radio publications, we are glad to see that the attack on the 40-metre BC stations is gathering momentum. Not only should the frequencies they occupy in the 7000-7100 kc band be used as much as possible, but the flow of individual letters of complaint be kept up. By this is meant that a single letter on behalf of, say, a 25-member club group is that much less effective than a letter from each of the 25 members individually. By the same token, letters from a lot of clubs and their members will do far more real good than one official complaint "through the usual channels" on behalf of U.K. amateurs as a body. This is a campaign in which *quantity* counts more than any other factor. The addresses to which to write are : Mr. R. Ahmed, Director-General, Radio Pakistan, 71 Garden Road, Karachi 3, Pakistan ; Mr. M. M. Taifour, Controller of International Relations, U.A.R. Broadcasting Corporation of Cairo, 4 Sherifein Street, Cairo, Egypt ; and Mr. Fang Chiung, Director, International Liaison Dept., Broadcasting Administration, People's Republic of China, Peking.

Short Wave Magazine Circulates Throughout the World