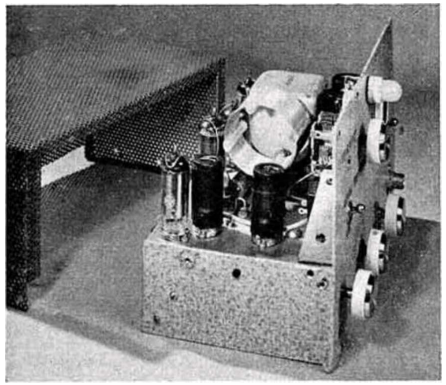

Three-quarter view of the miniature Top Band transmitter and its perforated zinc cover. The large inductor visible just in front of the modulation transformer is the p.a. coil, L5. Although the original was of American manufacture, a suitable Codar coil should be available.

A Miniature Top Band Transmitter

Designed for Mobile, Portable or Fixed Use

By REX J. TOBY, G2CDN*

WHEN the writer decided to dispose of his all-band A3 mobile equipment in order to change over to s.s.b. /M, the decision was taken to construct a miniature A3 transmitter for Top Band incorporating a number of useful features which will be given special attention in this article. The requirements were the need for s.s.b.-type stability, no drift, wobble or f.m., an input of eight to ten watts, and modulation quality well above average.

The complete circuit is shown in Fig. 1.

Variable Frequency Oscillator

A parallel tuned Colpitts oscillator was chosen, the frequency range being 900 to 1000 kc/s. In view of the superior stability of the inter-electrode capacities of the 6AU6, this valve was chosen for the v.f.o. A standard 150 volt neon acts as a regulator.

Apart *from the* usual precaution of rigidly fixing all components in this section, there will probably be need for temperature compensation, in the form of a negative temperature coefficient capacitor (C1). By holding a soldering iron or other source of heat close to, but not on the v.f.o. coil and capacitor, the most suitable value of capacitance to eliminate drift can be selected. An Erie 33 pF N750K has been found satisfactory.

Buffer-Doubler and Final Amplifier

This is quite conventional, the 6064 being merely a more rugged version of the 6AM6/EF91. Either of these types, however, can be used with virtually equivalent results.

The netting arrangement has been so devised that when the operator is listening, the v.f.o. can be used as a carrier insertion oscillator, or b.f.o., feeding into the front end of the receiver, for s.s.b. reception (this is sometimes referred to as "front-ending" an s.s.b. transmission). The injection is more than adequate, and the stability of the oscillator makes this easy. When in the *net* position, one can transmit immediately in the event of being in contact with an s.s.b. station.

Screen stabilization for the 5763 p.a. is effected by a low voltage neon, in place of the more usual screen dropping resistor. It may not be common knowledge that much audio power is wasted by the latter arrangement. Any neon that does not drop more than 60 volts on load and can pass 6 mA is suitable. The writer had an STC G551K available, which was found to be ideal.

In order to conserve space, the pi-tank output capacitor is made up by switching six fixed values of capacity calculated to match into a nominal impedance of 50 ohms.

Modulator

It was decided to use a 12AX7 valve in zero bias, driven by a 12AU7 with both sections strapped in parallel in order to accommodate any transformer losses. Approximately seven watts of audio power can be obtained from this arrangement.

Some years ago, John L. Reinartz produced a paper on "Increased Audio without Splatter." It explained that splatter is caused solely by the negative cycle, and that the secondary load always varies under modulation conditions, thus unbalancing a push-pull modulator stage. By loading the whole negative cycle, this state of affairs can be eliminated. A suitably polarized silicon diode with the correct loading resistor enables the operator to reap the full benefit of potent modulation without splatter. Furthermore, no complicated filters are required, because this system has no clipping action, and therefore audio harmonics are not generated by square wave-forms.

Operating Conditions

H.t. rail — 300 volts, 100mA, stiff.
P.a. anode current — 33mA.
L.t. voltage — 12·6v.
Modulator current — 10/40mA.
P.a. grid bias — 45v. negative.

R6 should be adjusted to satisfy the above bias require-

* 13 Wood Lane, Isleworth, Middlesex.

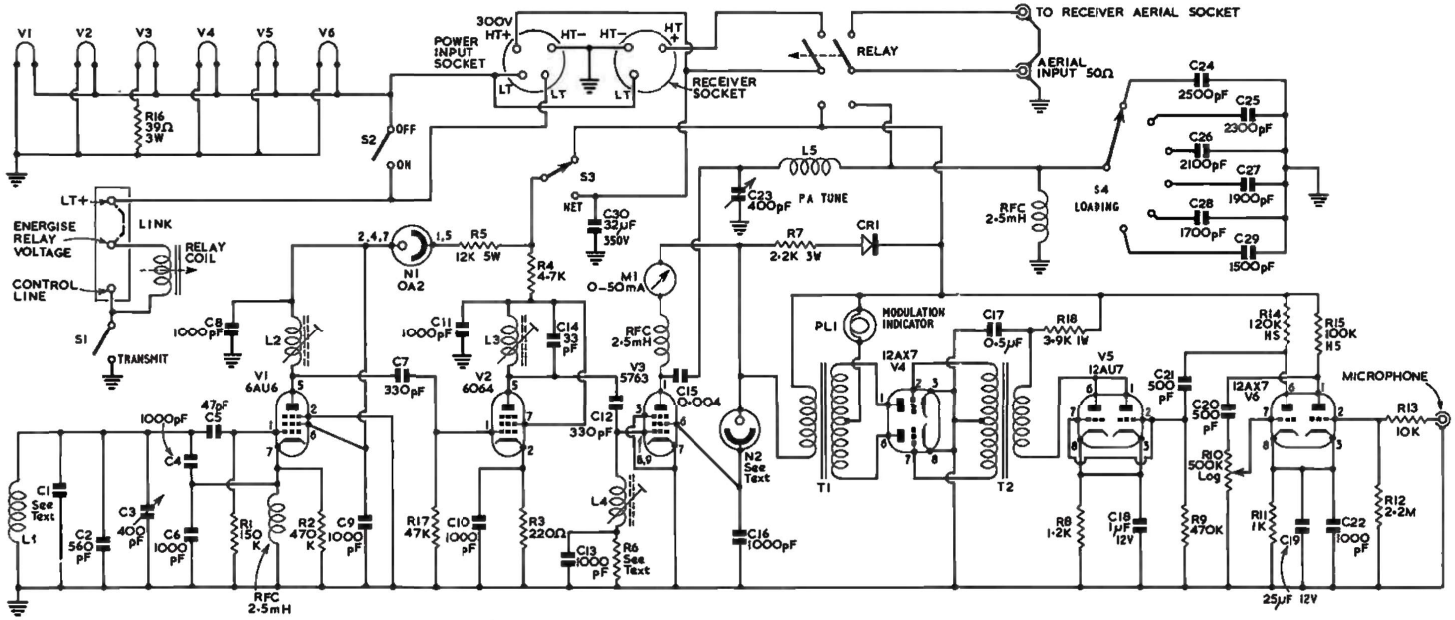

Fig. 1. Circuit of the complete Top Band transmitter and modulator. The heater circuit is designed for 12 volt input but it would be a simple matter to re-arrange it for 6 volt operation if desired.

COMPONENT LIST

C1	see text
C2	560 pF silver mica
C3, 23	approximately 400 pF variable Jackson ganged capacitor)
C4, 6	1000 pF silver mica
C5	47 pF ceramic
C7, 8, 9, 10, 11, 13, 16, 22	1000 pF disc ceramic
C12	330 pF
C14	33 pF silver mica
C15	0·004 µF, 1000 volts wkg.
C17	0·4 µF, 350 volts wkg.
C18	1 µF, 12 volts wkg.
C19	25 µF, 12 volts wkg.
C20, 21	500 pF
C24	2500 pF silver mica
C25	2300 pF silver mica
C26	2100 pF silver mica
C27	1900 pF silver mica
C28	1700 pF silver mica
C29	1500 pF silver mica
C30	32 µF, 350 volts wkg.
CR1	1000 p.i.v., 500 mA
L1, 2, 3, 4	modified slug-tuned medium wave receiver coils*
L5	30µH, 1½ in. diam., air spaced
N1	OA2
N2	see text
R1	150K ohms
R2, 9	470K ohms
R3	220 ohms
R4	4·7K ohms
R5	12K ohms, 5 watts
R6	see text
R7	2·2K ohms, 3 watts
R8	1·2K ohms
R10	500K ohms log. pot.
R11	1K ohms
R12	2·2M ohms
R13	10K ohms
R14	120K ohms, hi-stab.
R15	100K ohms, hi-stab.
R16	39 ohms, 3 watts
R17	3·9K ohms, 1 watt
T1	modulation transformer from SCR522 transmitter
T2	driver transformer from TR1986 modulator chassis
V1	6AU6
V2	6064, EF91 or 6AM6
V3	5763
V4	12AX7
V5	12AU7
V6	12AX7

* *A suitable type is available from Radio Clearance Ltd., 27 Tottenham Court Road, London, W.1.*

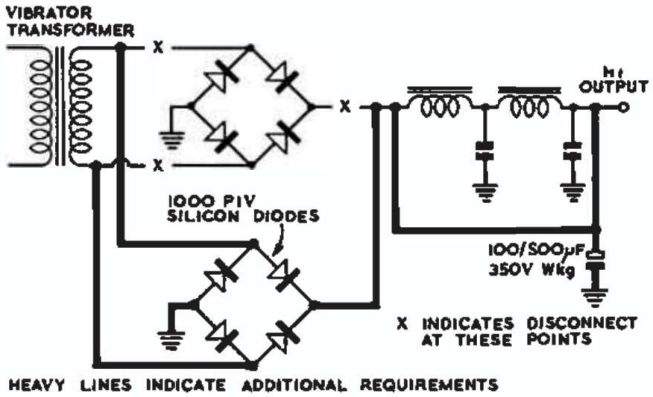

Fig. 2. Modification of the PCR type vibrator power pack.

ments, and the value will be between 10 and 20K ohms, according to the amount of r.f. drive obtained.

The slug-tuned coils should be resonated to the appropriate frequency, either 970 kc/s or 1940 kc/s. They have reasonably broad-band characteristics.

Mobile Power Supply

To realize optimum efficiency in the transmitter, the incorporation of a power supply that does not fluctuate or vary to any extent during modulation peaks is essential. Furthermore, it is necessary to load the final stage to 33mA in order to preserve the input and output impedances.

At the time that the transmitter was assembled, a very cheap PCR vibrator pack was available, and was thus included. Although it was rated at 300 volts at 100mA, the practical maximum load was however, considerably lower under test. Nevertheless, this type can be modified to provide a useful, consistent output, and the procedure for tackling this is outlined as follows.

The four selenium rectifiers should be replaced with 1000 p.i.v. silicon diodes, and a shorting wire connected across the double choke filter as shown in Fig. 2. Finally, a 100 to 500 μF, 350 volts working electrolytic capacitor should be wired across the output terminals.

Conclusion

In the short period during which this transmitter has been used /M, numerous contacts have been made in daylight with stations exceeding the normal ground-wave distances. When the writer was travelling to the Dartmouth Mobile Rally, a contact was made from the Wincanton area to G3PWW in Godstone: a distance of 110 miles with a report of RS58. G5UG of Weston-super-Mare was able to give a report of RS56 to the signals from this transmitter whilst at Basingstoke on the way home.

This small transmitter has lived up to the writer's expectations, and is a very useful, compact little instrument.

Support for the IQSY

DSIR is providing substantial support for the UK contribution to the International Years of the Quiet Sun (IQSY). This is an enterprise in international scientific collaboration aimed at obtaining a better understanding of how the sun's behaviour influences the earth.

Nine universities and colleges are between them receiving £100,000 in the form of thirteen special research grants, and investigations by DSIR's Radio Research Station are being carried out at Halley Bay, Antarctica; Port Stanley, Falkland Islands; Singapore; Lerwick, Scotland; and Slough, Buckinghamshire. The Radio Research Station is also responsible, on receiving notification from the USA, for transmitting to British observatories warnings of special geophysical conditions.

The IQSY (January 1, 1964 to December 31, 1965) coincide with a period of minimum sunspot activity. The scientific programme carried out will complement observations made during the International Geophysical Year (July 1, 1957 to December 31, 1958) when the sun was last in its most active state. The preparation and co-ordination of the UK programme is in the hands of the Royal Society's British National Committee for Co-operation in Geophysics.

The university and college groups being assisted by DSIR are covering all of the IQSY programme subjects except meteorology. These are geomagnetism, aurora, airglow, ionosphere, solar activity, cosmic rays and aeronomy, of which geomagnetism and the ionosphere concern the Radio Research Station. Its ionospheric research includes the reception and analysis of telemetered information from topside sounding satellites, and low and very low frequency radio wave propagation studies.

Enquiries Regarding Bulletin Articles

Members who write to the authors of BULLETIN articles are asked to enclose stamped addressed envelopes if they require replies.

12,000 PLUS IN THE POST

This special 80 page issue of the RSGB BULLETIN celebrates the fact that direct circulation to members has risen to well over 12,000 copies an issue in recent months. Indeed, total circulation is now climbing rapidly towards 13,000.

While no immediate increase in the number of pages in every issue is envisaged, members may help materially to bring the day when the BULLETIN grows even larger by inviting radio friends who are not at present members to join the Society. An application form appeared in the February issue. Alternatively, a QSL card to Headquarters will ensure that a form and complimentary copy of the BULLETIN reaches a potential member without delay.

The increasing circulation of the BULLETIN makes it an even more appealing medium for advertising to the Amateur Radio market both in the United Kingdom and throughout the world. Members can help in this sphere by mentioning the RSGB BULLETIN when writing to advertisers.