A Compact Low Power Transmitter

By ALAN G. DUNN (G3PL)*

THE unit to be described may be used either as a self-contained transmitter with crystal control or in conjunction with a separate v.f.o. It was originally designed for use with the v.f.o. unit described in the January, 1951, issue of the BULLETIN, and has since been modified to permit the use of crystal control. Although no deliberate harmonic filtering has been used, no trouble has been experienced with TVI though there may be some in areas served by Channel I television stations (at the time of writing, Belfast and London). With a 250 volts h.t. supply the unit runs at 5 watts input to the p.a. stage; if the voltage is raised to 350, 10 watts input is possible.

Circuit Description

The first stage is a 6AC7 valve which acts either as a resistance-coupled buffer stage when an external v.f.o. is used or as a Pierce crystal oscillator. This drives a 6AG7 which acts either as a straight amplifier or as a frequency doubler. On 1.8 Mc/s it is always used as a straight p.a. stage and on 14 Mc/s as a doubler. The power output is about 3 watts when used as an amplifier and 1½ watts as a doubler, for an input of 5 watts. The change-over from v.f.o. to crystal control is made by taking out the coaxial input plug from the v.f.o. and plugging in the crystal.

Owing to the fact that only one tuned circuit is used in the unit the stability is excellent. Neutralizing is not required. The 6AG7 has a considerably lower grid-anode capacitance and a higher mutual conductance than commonly used types such as the 6V6, 6L6 and 807, and is very suitable for use in low power transmitter stages.

The p.a. tank circuit is arranged so that the spindle of the variable condenser is earthed, which permits mounting it directly on the metal panel. A resistor of 100 ohms acts as an r.f. choke and has been found to give more stable operation than a normal choke in this position. The tank coil should be arranged so that the end connected to C8 is the one nearest to the aerial coil; the end of the aerial coil nearest to the tank coil should be earthed. This reduces the stray capacitive coupling between the tank circuit and aerial circuit which might cause the radiation of harmonics. A closed-circuit jack is used in the p.a. cathode circuit for keying purposes while another in the anode circuit allows an external meter to be used for measuring the anode current.

Construction

Like the v.f.o. unit previously described this transmitter is built on a BC-357 marker beacon receiver chassis. All components, except the two valve-holders, should be stripped out of the BC-357 and the relay mounting plate removed by punching out the rivets holding it to the chassis. The valve-holder nearest to the panel, which is the one used for the p.a. valve, should be turned round if necessary so that the anode pin (No. 8) is adjacent to the small lead-through insulator existing in the BC-357. The anode connection is taken *via* this insulator through the deck of the chassis. The tank circuit components are mounted above the chassis and the remainder of the components and wiring below the deck.

The rear valve-holder is used for the buffer/oscillator stage. The input from the v.f.o. is taken through a Pye coaxial socket mounted on the back drop of the chassis whilst the crystal socket is mounted at the rear of the side drop of the chassis, as shown in Fig. 2. A hole 1⅛ in. in diameter is cut in the back of the metal cover to permit the Pye socket to pass through, and two ⅝ in. holes are drilled in the side of the cover so that the crystal can be plugged in when the cover is in position.

The p.a. tank condenser, a small receiving type, has proved to have sufficient spacing to stand 250 volts h.t. If there is any doubt about this point a fixed condenser of 0.002 μF and of a suitable voltage rating may be connected in series with it on the anode side. This will remove the h.t. voltage from the fixed vanes. The plug-in tank coils are wound on Maxi-Q four-pin polystyrene formers of the horizontal type. Coil winding data is given at the end of the article. The coupling winding is brought out to a pair of Clix insulated sockets mounted on the front panel.

The supply voltages are taken into the unit through a length of twin screened flex which passes through a grommet in the panel below the deck of the chassis. The outer braid is used for the common h.t. negative and earthy heater connections; one of the inner conductors is used for the "live" heater lead, and the other for the h.t. positive.

Two jacks are mounted on the panel below the chassis. The jack removed from the BC-357 may be used for J1 but an insulated type is required for J2. This is mounted in the hole originally occupied by the power supply

*22 Meadowbank Road, Hull, Yorks

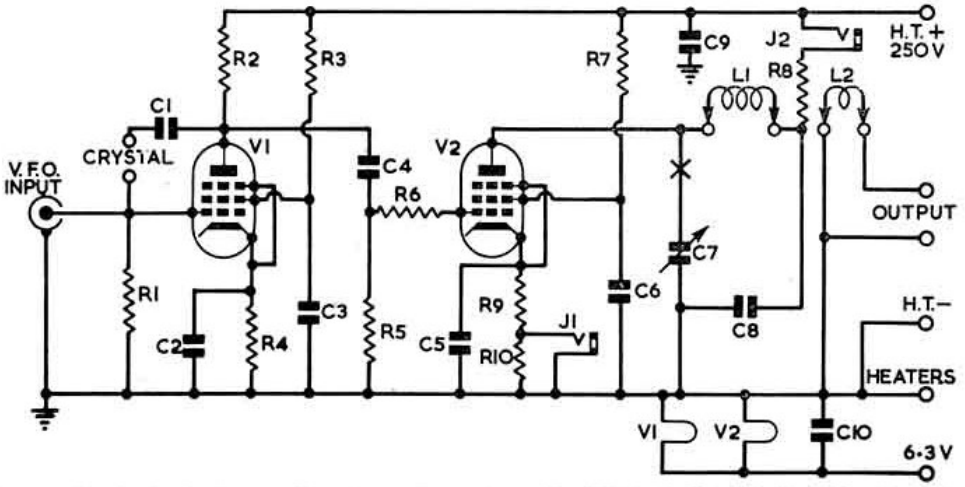

Fig. 1. Circuit of the Compact Low Power Transmitter. C1, 0.001 μF; C2, C5, C9, 0.01 μF tubular; C3, C6, C8, 0.002 μF; C4, 200 μμF mica; C7, 100 μμF mica; C10, 0.1 μF tubular. R1, R2, 4,700 ohms; R3, 22,000 ohms; R4, 180 ohms; R5, 10,000 ohms; R6, 150 ohms; R7, 6,800 ohms; R8, R9, 100 ohms 1 watt; R10, 100,000 ohms. If the h.t. voltage is raised to 350 volts, the following resistance values should be used: R2, 10,000 ohms 1 watt; R3, 47,000 ohms 1 watt; R7, 18,000 ohms 1 watt. V1, 6AC7; V2, 6AG7.

socket. A piece of aluminium 1 in. square is fastened over the hole, on the inside, by nuts and bolts through the existing four holes, and the jack, an Igranic type P72, is mounted centrally on this.

Performance

The p.a. stage can be loaded up to 20 mA anode current at 250 volts h.t., either operating straight through or doubling. The total h.t. current taken by the unit is about 40 mA.

The output coupling winding on each coil is left free to slide on the former until the correct setting for the aerial normally used is found, when it may be fixed with a dab of Durofix. It has not been found necessary to use voltage stabilization on the h.t. supply when used with the companion v.f.o. unit on 7 and 14 Mc/s, although the regulation of the power pack supplying both units is not good.

Use of Higher H.T. Voltage

If it is intended to use this transmitter with an h.t. voltage of 350, at which 10 watts input is obtained, it would be advisable to increase the values of the 6AC7 anode and screen resistors, and of the 6AG7 screen resistor, to the values given in the caption to Fig. 1. As a precaution, the series fixed condenser for blocking the h.t. voltage from the fixed vanes of the tank condenser, referred to earlier, should be inserted at the point marked "X" in Fig. 1.

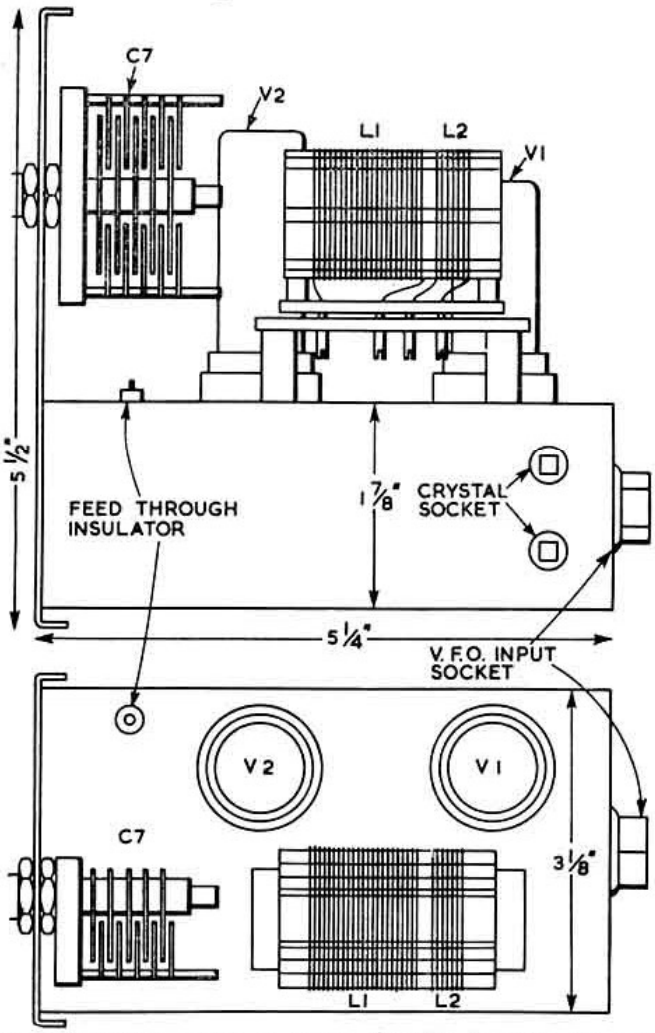

Fig. 2. Suggested Layout of Chassis. (a) Side Elevation. (b) Plan.

Coil Winding Data

The Maxi-Q formers are 1⅛ in. in diameter and the winding space available is just under 1½ in. long. If the specified wire gauges are used there should be no difficulty in getting the 1.8 and 3.5 Mc/s coil windings into the available space. In each case, the aerial coil should be about one-fifth of the number of turns specified for the tank coil.

The coil data is as follows:—

1.8 Mc/s	120 turns, 36 s.w.g. enamelled.
3.5 Mc/s	50 turns, 28 s.w.g. enamelled.
7 Mc/s	23 turns, 20 s.w.g. enamelled.
14 Mc/s	10 turns, 20 s.w.g. enamelled.

London Members' Luncheon Club

AT the meeting on October 21 the Chairman, Stanley Vanstone (G2AYC), welcomed EA8BB from Tenerife and ZB1PP who is now G3KOJ. Both visitors took the opportunity of expressing the good wishes sent by their own clubs.

The next regular meeting will be on November 18 at 12.30 p.m. at the Bedford Corner Hotel, Tottenham Court Road, W.C.1. It is hoped to arrange an additional meeting at the Royal Hotel on Friday, November 25, during the Amateur Radio Exhibition.

The New Year Party will be held at the Bedford Corner Hotel at 6.30 for 7 p.m. on February 3, 1956. Members should telephone Ruislip 2763 or HOLborn 7373 to book a seat at luncheons. There will be no meeting in January.

North West Manchester Annual Get-together

THE Fourth Annual Get-together of North West Manchester Radio Amateurs will this year take the form of a hot-pot supper and smoking concert at the Bull's Head Hotel, Walkden, on December 17. It is expected that a member of the Post Office Engineering Department will be present to give a short informal talk on the problems of TVI. Applications for tickets should be addressed to G3HNT, 37 Ranelagh Road, Pendlebury, near Manchester (telephone no. Swinton 2807), active on 3.5 Mc/s at the weekends, or to G3JNX (telephone no. Urmston 6816), active on Top Band most evenings.

Region 1 Field Day, 1955

STOCKPORT Group, with 74 points, who operated under the call-sign G3FYE/P, were the winners of the Region 1 Field Day held in September. Second were Wirral (G2AMV/P) with 70, followed by Blackpool (G5ND/P) with 67, Southport (G2ART/P) with 62 and Chester (G3KJW/P) with 53. G3ABM/P operated a one-man station at Ellesmere Port and scored 25 points.

Can You Help ?

MR. George Western (B.R.S. 20605), 118 Salisbury Avenue, Barton, Torquay, will be pleased to hear from other members who, like himself, suffer from blindness. Mr. Western is anxious to obtain the loan of a tape recorder to enable him to pursue his studies for the Radio Amateurs' Examination. Unfortunately, because of sugar diabetes which causes a lack of sensitivity in the finger tips, he is unable to read Braille.

Mr. Western would be glad to have the address of any Club that caters for the afflicted radio amateur.